PRODUCT DATASHEET

LUM400/400

Lido Handmade Double Bowl Undermount Sink
400x400x220/400x400x220

Finish	Steel Surface, Satin.
Material	1.0mm Type 304 Stainless Steel
Range	Venetian
Hafele Code	567.82.250

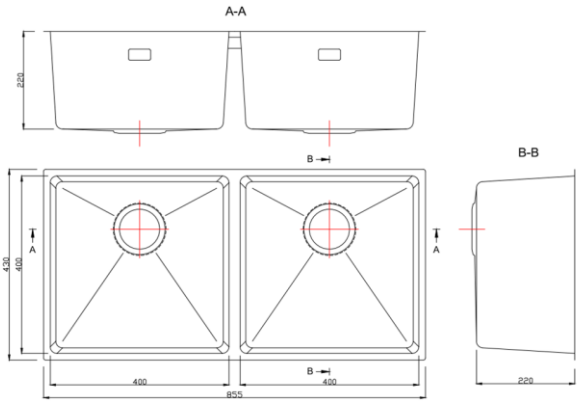

PRODUCT INFORMATION

Product Code:	LUM400/400
Configuration:	Bowl & Half Sink.
Bowl Size:	400x400x220 And 400x400x220
Overall Size:	855x430
Cabinet Size mm:	900
Cut-Out Size:	Per Template
Drain Size [mm]:	90
Outer Box	910x560x275
Gross Weight [KG]	11.6
Installation Type:	Undermount
Handed:	Unhanded
Radius:	15mm Radius corners
Template Included:	Yes

ADDITIONAL INFORMATION

Packaging:	Single Box or Nested.
Clips Included:	Yes
Waste Included:	Yes
Handmade:	Handmade, Inclined 3.5 degrees.
Sound Damping:	Sound Damping Pads.
Overflow Aperture:	Overflow Aperture.
Compatible Waste Set:	H004x2
Finish:	Steel Surface, Satin.
Radius:	15mm Radius corners

Häfele Ireland Ltd.
Kilcoole Industrial Estate
Kilcoole
Co Wicklow
A63 KC58

Tel: +353 (0)1287 3488
Fax: +353 (0)1287 3563
E-mail: info@hafele.ie